Centre Number	Candidate Number	Name

UNIVERSITY OF CAMBRIDGE INTERNATIONAL EXAMINATIONS
General Certificate of Education
Advanced Subsidiary Level and Advanced Level

PHYSICS **9702/02**

Paper 2

May/June 2006

1 hour

Candidates answer on the Question Paper.
No Additional Materials are required.

READ THESE INSTRUCTIONS FIRST

Write your Centre number, candidate number and name on all the work you hand in.
Write in dark blue or black pen in the spaces provided on the Question Paper.
Do not use staples, paper clips, highlighters, glue or correction fluid.

Answer **all** questions.
You may use a soft pencil for any diagrams, graphs or rough working.
You may lose marks if you do not show your working or if you do not use appropriate units.
At the end of the examination, fasten all your work securely together.
The number of marks is given in brackets [ ] at the end of each question or part question.

For Examiner's Use	
1	
2	
3	
4	
5	
6	
7	
8	
Total	

This document consists of **16** printed pages.

© UCLES 2006

Data

speed of light in free space,	$c = 3.00 \times 10^{8}\ \text{m s}^{-1}$
permeability of free space,	$\mu_0 = 4\pi \times 10^{-7}\ \text{H m}^{-1}$
permittivity of free space,	$\epsilon_0 = 8.85 \times 10^{-12}\ \text{F m}^{-1}$
elementary charge,	$e = 1.60 \times 10^{-19}\ \text{C}$
the Planck constant,	$h = 6.63 \times 10^{-34}\ \text{J s}$
unified atomic mass constant,	$u = 1.66 \times 10^{-27}\ \text{kg}$
rest mass of electron,	$m_e = 9.11 \times 10^{-31}\ \text{kg}$
rest mass of proton,	$m_p = 1.67 \times 10^{-27}\ \text{kg}$
molar gas constant,	$R = 8.31\ \text{J K}^{-1}\ \text{mol}^{-1}$
the Avogadro constant,	$N_A = 6.02 \times 10^{23}\ \text{mol}^{-1}$
the Boltzmann constant,	$k = 1.38 \times 10^{-23}\ \text{J K}^{-1}$
gravitational constant,	$G = 6.67 \times 10^{-11}\ \text{N m}^2\ \text{kg}^{-2}$
acceleration of free fall,	$g = 9.81\ \text{m s}^{-2}$

© UCLES 2006

Formulae

uniformly accelerated motion, $s = ut + \frac{1}{2}at^2$
$v^2 = u^2 + 2as$

work done on/by a gas, $W = p\Delta V$

gravitational potential, $\phi = -\frac{Gm}{r}$

simple harmonic motion, $a = -\omega^2 x$

velocity of particle in s.h.m., $v = v_0 \cos \omega t$
$v = \pm \omega \sqrt{(x_0^2 - x^2)}$

resistors in series, $R = R_1 + R_2 + \ldots$

resistors in parallel, $1/R = 1/R_1 + 1/R_2 + \ldots$

electric potential, $V = \frac{Q}{4\pi\epsilon_0 r}$

capacitors in series, $1/C = 1/C_1 + 1/C_2 + \ldots$

capacitors in parallel, $C = C_1 + C_2 + \ldots$

energy of charged capacitor, $W = \frac{1}{2}QV$

alternating current/voltage, $x = x_0 \sin \omega t$

hydrostatic pressure, $p = \rho g h$

pressure of an ideal gas, $p = \frac{1}{3}\frac{Nm}{V}\langle c^2 \rangle$

radioactive decay, $x = x_0 \exp(-\lambda t)$

decay constant, $\lambda = \frac{0.693}{t_{\frac{1}{2}}}$

critical density of matter in the Universe, $\rho_0 = \frac{3H_0^2}{8\pi G}$

equation of continuity, $Av = \text{constant}$

Bernoulli equation (simplified), $p_1 + \frac{1}{2}\rho v_1^2 = p_2 + \frac{1}{2}\rho v_2^2$

Stokes' law, $F = Ar\eta v$

Reynolds' number, $R_e = \frac{\rho v r}{\eta}$

drag force in turbulent flow, $F = Br^2\rho v^2$

© UCLES 2006

[Turn over

Answer **all** the questions in the spaces provided.

1 **(a)** Derive the SI base unit of force.

SI base unit of force = ... [1]

(b) A spherical ball of radius r experiences a resistive force F due to the air as it moves through the air at speed v. The resistive force F is given by the expression

$$F = crv,$$

where c is a constant.

Derive the SI base unit of the constant c.

SI base unit of c = ... [1]

© UCLES 2006

(c) The ball is dropped from rest through a height of 4.5 m.

(i) Assuming air resistance to be negligible, calculate the final speed of the ball.

speed = ... $m\,s^{-1}$ [2]

(ii) The ball has mass 15 g and radius 1.2 cm.

The numerical value of the constant c in the equation in **(b)** is equal to 3.2×10^{-4} when measured using the SI system of units.

Show quantitatively whether the assumption made in **(i)** is justified.

[3]

© UCLES 2006

[Turn over

2 A rod AB is hinged to a wall at A. The rod is held horizontally by means of a cord BD, attached to the rod at end B and to the wall at D, as shown in Fig. 2.1.

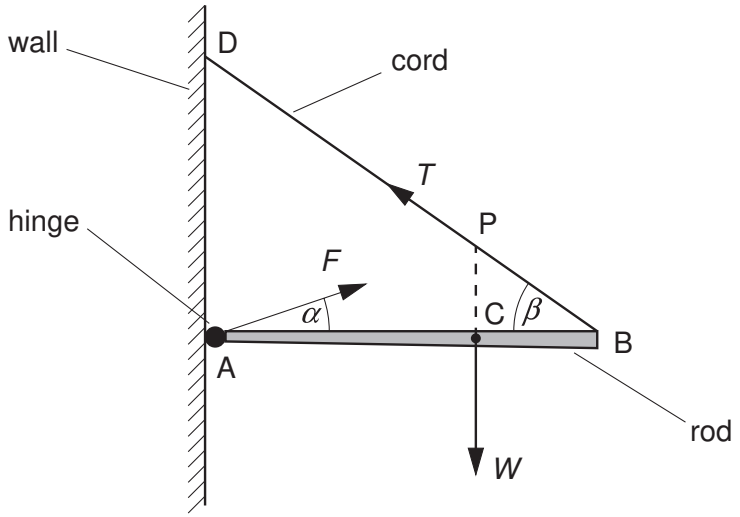

Fig. 2.1

The rod has weight *W* and the centre of gravity of the rod is at C. The rod is held in equilibrium by a force *T* in the cord and a force *F* produced at the hinge.

(a) Explain what is meant by

(i) the *centre of gravity* of a body,

.....

.....

..... [2]

(ii) the *equilibrium* of a body.

.....

.....

.....

..... [2]

© UCLES 2006

(b) The line of action of the weight W of the rod passes through the cord at point P.

Explain why, for the rod to be in equilibrium, the force F produced at the hinge must also pass through point P.

.....

.....

.....

..... [2]

(c) The forces F and T make angles α and β respectively with the rod and AC = $\frac{2}{3}$AB, as shown in Fig. 2.1.

Write down equations, in terms of F, W, T, α and β, to represent

(i) the resolution of forces horizontally,

..... [1]

(ii) the resolution of forces vertically,

..... [1]

(iii) the taking of moments about A.

..... [1]

© UCLES 2006

[Turn over

3 **(a)** Explain what is meant by the *internal energy* of a substance.

.....

.....

..... [2]

(b) State and explain, in molecular terms, whether the internal energy of the following increases, decreases or does not change.

(i) a lump of iron as it is cooled

.....

.....

.....

..... [3]

(ii) some water as it evaporates at constant temperature

.....

.....

.....

..... [3]

© UCLES 2006

4 **(a)** Define *density*.

.....

.....

..... [1]

(b) A U-tube contains some mercury. Water is poured into one arm of the U-tube and oil is poured into the other arm, as shown in Fig. 4.1.

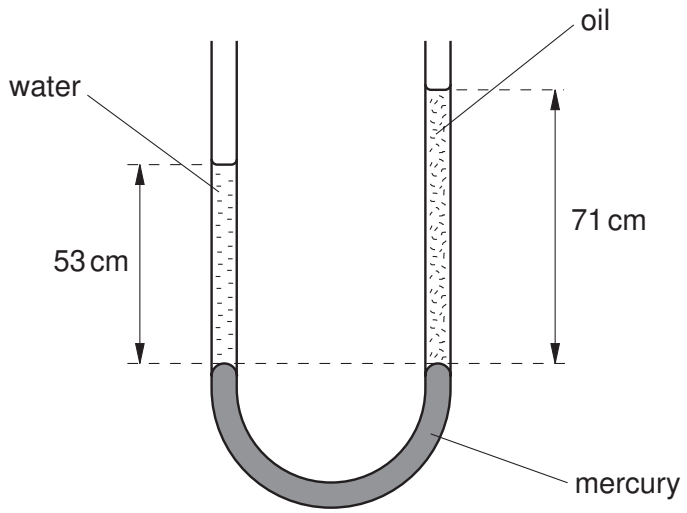

Fig. 4.1

The amounts of oil and water are adjusted until the surface of the mercury in the two arms is at the same horizontal level.

(i) State how it is known that the pressure at the base of the column of water is the same as the pressure at the base of the column of oil.

.....

..... [1]

(ii) The column of water, density 1.0×10^3 kg m^{-3}, is 53 cm high. The column of oil is 71 cm high.

Calculate the density of the oil. Explain your working.

density = ... kg m^{-3} [3]

© UCLES 2006

5 Fig. 5.1 shows the variation with force F of the extension x of a spring as the force is increased to F_3 and then decreased to zero.

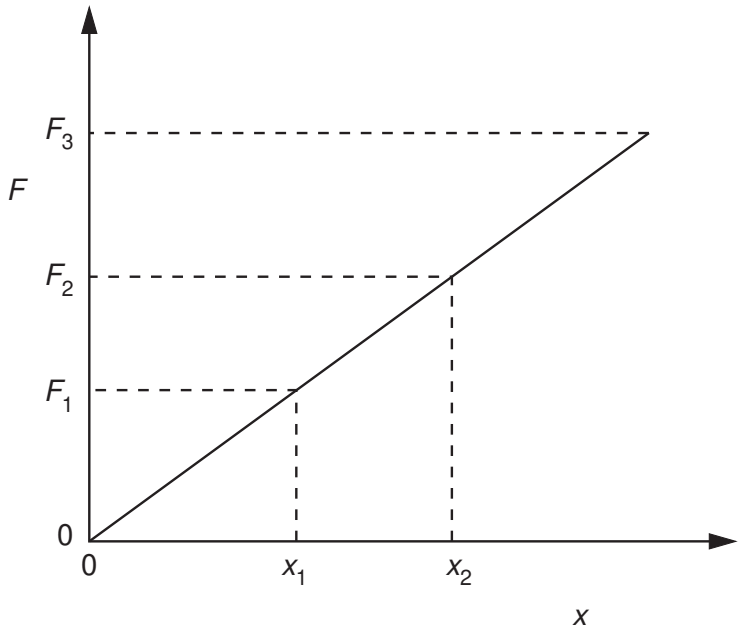

Fig. 5.1

(a) State, with a reason, whether the spring is undergoing an elastic change.

.....

..... [1]

(b) The extension of the spring is increased from x_1 to x_2.

Show that the work W done in extending the spring is given by

$$W = \tfrac{1}{2}k(x_2^2 - x_1^2),$$

where k is the spring constant.

[3]

(c) A trolley of mass 850 g is held between two fixed points by means of identical springs, as shown in Fig. 5.2.

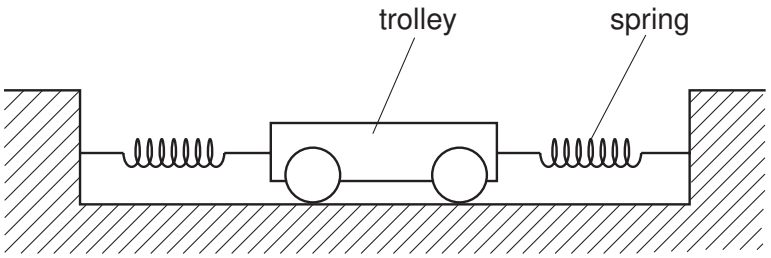

Fig. 5.2

When the trolley is in equilibrium, the springs are each extended by 4.5 cm. Each spring has a spring constant 16 N cm^{-1}.

The trolley is moved a distance of 1.5 cm along the direction of the springs. This causes the extension of one spring to be increased and the extension of the other spring to be decreased. The trolley is then released. The trolley accelerates and reaches its maximum speed at the equilibrium position.

Assuming that the springs obey Hooke's law, use the expression in **(b)** to determine the maximum speed of the trolley.

speed = ... m s^{-1} [4]

6 A long tube, fitted with a tap, is filled with water. A tuning fork is sounded above the top of the tube as the water is allowed to run out of the tube, as shown in Fig. 6.1.

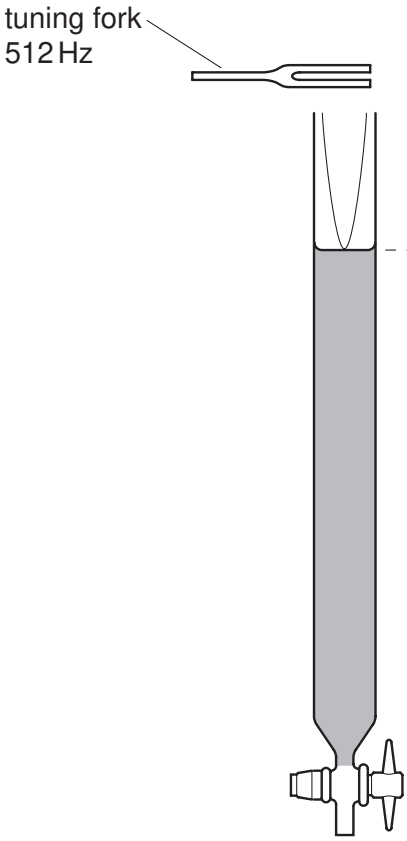

Fig. 6.1

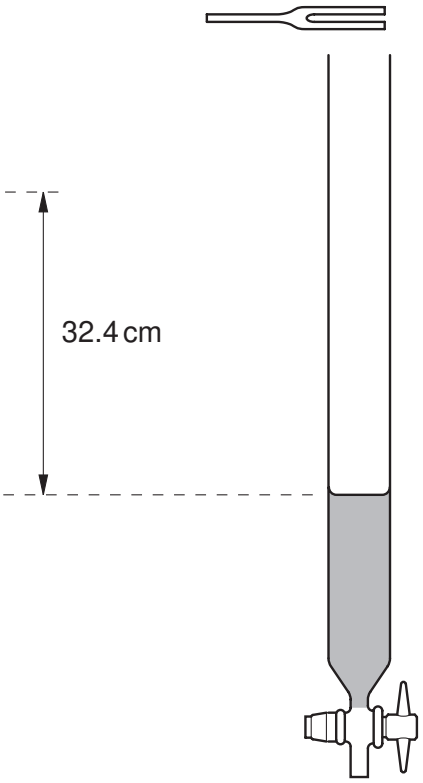

Fig. 6.2

A loud sound is first heard when the water level is as shown in Fig. 6.1, and then again when the water level is as shown in Fig. 6.2.

Fig. 6.1 illustrates the stationary wave produced in the tube.

(a) On Fig. 6.2,

(i) sketch the form of the stationary wave set up in the tube, [1]

(ii) mark, with the letter N, the positions of any nodes of the stationary wave. [1]

© UCLES 2006

(b) The frequency of the fork is 512 Hz and the difference in the height of the water level for the two positions where a loud sound is heard is 32.4 cm.

Calculate the speed of sound in the tube.

speed = ... $m\,s^{-1}$ [3]

(c) The length of the column of air in the tube in Fig. 6.1 is 15.7 cm.

Suggest where the antinode of the stationary wave produced in the tube in Fig. 6.1 is likely to be found.

.....

.....

..... [2]

© UCLES 2006

[Turn over

7 A circuit contains three similar lamps A, B and C. The circuit also contains three switches, S_1, S_2 and S_3, as shown in Fig. 7.1.

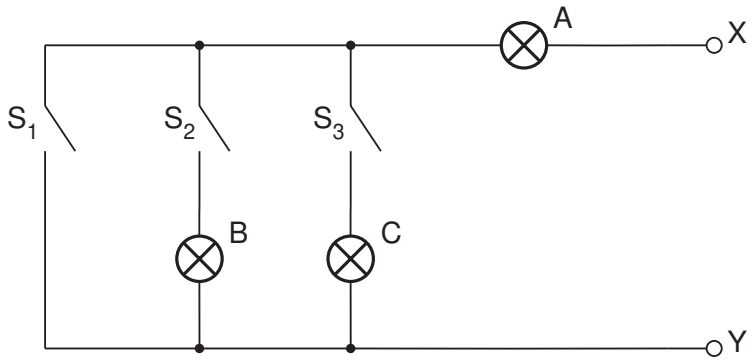

Fig. 7.1

One of the lamps is faulty. In order to detect the fault, an ohm-meter (a meter that measures resistance) is connected between terminals X and Y. When measuring resistance, the ohm-meter causes negligible current in the circuit.

Fig. 7.2 shows the readings of the ohm-meter for different switch positions.

switch			meter reading
S_1	S_2	S_3	/ Ω
open	open	open	∞
closed	open	open	15 Ω
open	closed	open	30 Ω
open	closed	closed	15 Ω

Fig. 7.2

(a) Identify the faulty lamp, and the nature of the fault.

faulty lamp: .....

nature of fault: ..... [2]

(b) Suggest why it is advisable to test the circuit using an ohm-meter that causes negligible current rather than with a power supply.

.....

..... [1]

© UCLES 2006

(c) Determine the resistance of one of the non-faulty lamps, as measured using the ohm-meter.

resistance = ... Ω [1]

(d) Each lamp is marked 6.0 V, 0.20 A.

Calculate, for one of the lamps operating at normal brightness,

(i) its resistance,

resistance = ... Ω [2]

(ii) its power dissipation.

power = ... W [2]

(e) Comment on your answers to **(c)** and **(d)(i)**.

.....

.....

.....[2]

8 The radioactive decay of nuclei is both spontaneous and random.

Explain what is meant by

(a) *radioactive decay* of a nucleus,

.....

.....

..... [2]

(b) *spontaneous* decay,

.....

.....

..... [2]

(c) *random* decay.

.....

.....

..... [2]

Permission to reproduce items where third-party owned material protected by copyright is included has been sought and cleared where possible. Every reasonable effort has been made by the publisher (UCLES) to trace copyright holders, but if any items requiring clearance have unwittingly been included, the publisher will be pleased to make amends at the earliest possible opportunity.

University of Cambridge International Examinations is part of the University of Cambridge Local Examinations Syndicate (UCLES), which is itself a department of the University of Cambridge.